INSTALLATION AND OPERATING MANUAL

Series SR/F, SR-B/F, SRV/F,
SRV-B/F, SRZ-V/F

Check Valve

solid ball, hollow ball or hollow plug with integrated sight glasses

Keep for future use!

This operating manual must be strictly observed before transport, installation, operation and maintenance

Subject to change without notice.

Reproduction is generally permitted with indication of the source.

© Richter Chemie-Technik GmbH

9550-010-en Revision 11 Edition 07/2016

RICHTER
Process Pumps & Valves

List of Contents

List of Contents **2**

Relevant documents **2**

1 Technical data **3**

1.2 Type plate, CE and body markings 4

1.1 Tightening torques 4

1.3 Flow rates 4

1.4 Minimum differential pressures 4

1.5 Pressure-temperature diagrams 5

2 Notes on safety **6**

2.1 Intended use 6

2.2 For the customer/operator 6

2.3 Improper operation 6

3 Safety notes for applications in potentially explosive areas based on the Directive 2014/34/EU (ATEX) **7**

3.1 Intended use 7

4 Safety note for valves, certified to Clean Air Act (TA Luft) **8**

5 Transport, storage and disposal **8**

5.1 Storage 8

5.2 Return consignments 8

5.3 Disposal 8

6 Installation **9**

6.1 Flange caps and gaskets 9

6.2 Direction of flow and installation position 9

6.3 Grounding 9

6.4 Test pressure 9

7 Operation **10**

7.1 Initial commissioning 10

7.2 Improper operation and their consequences 10

7.3 Shutdown 10

8 Malfunctions **10**

9 Maintenance **11**

9.1 Dismantling 11

9.1.1 Replacing worn part 11

9.2 Assembly 11

10 Drawings **12**

10.1 Sectional drawing SR/F, SR-B/F, SRV/F und SRV-B/F 12

10.2 Sectional drawing SRZ-V/F 13

10.3 Dimensional drawing 14

Relevant documents

- EG-Declaration of conformity
- Manufacturer Declaration ATEX Directive 2014/34/EU
- Manufacturer Declaration TA-Luft
- Form for Safety Information Concerning the Contamination QM 0912-16-2001_en

1 Technical data

Manufacturer :

Richter Chemie-Technik GmbH
Otto-Schott-Str. 2
D-47906 Kempen
Telephone: +49 (0) 2152 146-0
Fax: +49 (0) 2152 146-190
E-Mail : richter-info@idexcorp.com
Internet: http://www.richter-ct.com

Designation :

Check valve with integrated sight glasses

Series **SR/F** ➔ solid ball
Series **SR-B/F** ➔ solid ball and soft-sealing seat

Series **SRV/F** ➔ hollow ball
Series **SRV-B/F** ➔ hollow ball and soft-sealing seat

Series **SRZ-V/F** ➔ hollow plug and soft-sealing seat

Certified to Clean Air Act (TA Luft)

Strength and tightness (P10, P11) of the pressure-bearing body tested to DIN EN 12266-1.

SR/F, SRV/F
DIN EN 12266-1 leak rate D

SR-B/F, SRV-B/F, SRZ-V/F
Gas-tight (P12) in the seat to DIN EN 12266-1, Gas-tight (P12) in the seat to DIN EN 12266-1,
leak rate A.

Face to face: DIN EN558-1 basic series 1,
ISO 5752 series 1

Flange connecting dimensions:
DIN EN 1092-2, type B (ISO 7005-2, type B) PN 16 or flanges drilled to ASME 16.5, Class 150

Materials :

Body material: Ductile cast iron EN-JS 1049 / ASTM A395

Lining material: PFA .../F
On request: antistatic …/F-L

Ball PTFE, optionally stainless steel, Hastelloy
at PFA/F-L PTFE-carbon

Plug modified PTFE (TFM-PTFE)
at PFA/F-L PTFE-carbon

Seat seal SR-B/F, SRV-B/F, SRZ-V/F
FFKM with FDA (DYNALAST 8703)

Sight glass panes: borosilicate glass to DIN 7080

Temperature range :

See pressure-temperature diagram in Section 1.5.

Operating pressure: from vacuum to max. 16 bar
See pressure-temperature diagram in Section 1.5.

Size in mm:

SR/F SR-B/F, SRV/F, SRV-B/F
DN 25, 40, 50, 80, 100

SRZ-V/F
DN 25, 50

Weight:

DN	25	40	50	80	100
approx. kg	6.2	8.9	14.5	25	37

Installation position:
horizontal, inclined, vertical (SRV-Z/F only vertical) See Section 6.2.

Dimensions and individual parts:

See sectional drawing in Section 10.

Wear parts:

- Solid ball
- Hollow ball
- Hollow plug
- Seat
- Seat seal (SR-B/F, SRV-B/F, SRZ-V/F)

1.1 Type plate, CE and body markings

The stainless steel name plate is undetachably riveted to the body.

If the operator attaches his identification, it must be ensured that the valve matches the application in question.

Example of name plate with CE marking

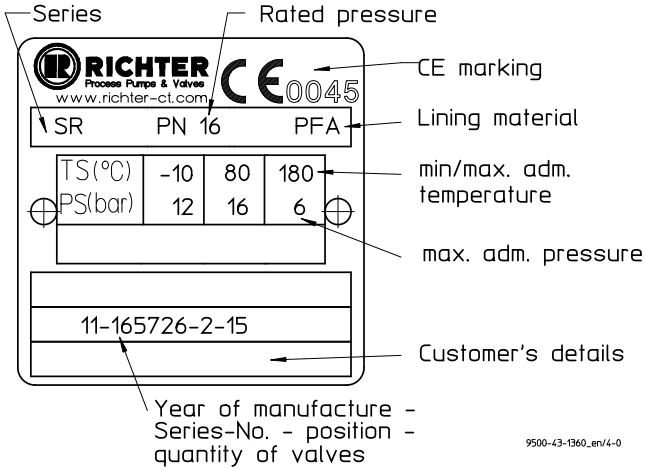

No CE marking is permissible for the size 25; the name plate therefore has no CE marking.

Body identification:

The following are visible on the body according to DIN EN 19 and AD 2000 A4:

- Nominal size
- Rated pressure
- Body material
- Manufacturer's identification
- Melt number/Foundry identification
- Cast date
- Arrow for direction of flow

1.2 Tightening torques

All screws greased, tighten in diametrically opposite sequence!

The tightening torques for pipe screws and cover screws mentioned must not be exceeded.

The following tightening torques are recommended:

Pipe screws, flanges to DIN/ISO

Nominal size [mm]	Screws [DIN/ISO]	Tightening torque [Nm]
25	4 x M 12	10
40	4 x M 16	20
50	4 x M 16	26
80	8 x M 16	25
100	8 x M 16	35

Pipe screws, flanges ISO/DIN, drilled to ASME Class 150

Nominal size [mm]	[inch]	Screws [ASME]	Tightening torque [in-lbs]	[Nm]
25	1	4 x ½“	70	8
40	1½	4 x ½“	135	15
50	2	4 x ⅝“	220	25
80	3	4 x ⅝“	400	45
100	4	8 x ⅝“	310	35

Cover screws

Nominal size [mm]	Screws [DIN/ISO]	Tightening torque [Nm]
25	4 x M 12	25
40	4 x M 16	50
50	4 x M 16	50
80	8 x M 16	50
100	8 x M 16	50

1.3 Flow rates

	SR/F, SR-B/F, SRV/F, SRV-B/F	SRZ-V/F
Nominal size [mm]	Kv 100 [m^3/h]	Kv 100 [m^3/h]
25	15	10
40	35	--
50	50	35
80	125	--
100	170	--

1.4 Minimum differential pressures

	Installation position horizontal	vertical
SR/F	1 bar	20 mbar
SR-B/F	1 bar	20 mbar
SRV/F	0,5 bar	10 mbar
SRV-B/F	0,5 bar	10 mbar
SRZ-V/F		5 mbar

If the SRV/F, SRV-B/F and SRZ-V/F is installed as ventilation valve, it will close from a density of 1 kg/dm^3 upwards.

1.5 Pressure-temperature diagrams

When used in the minus temperature range, the regulations applicable in the country in question must be observed.

Series SR/F, solid ball

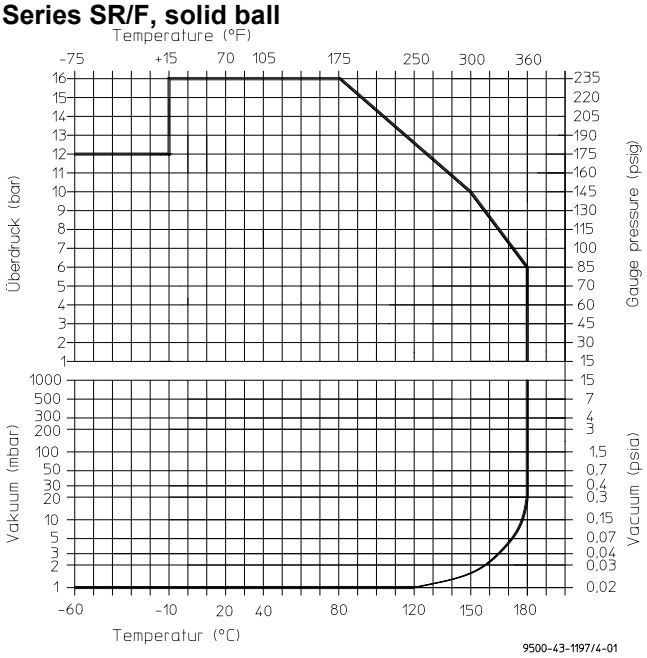

Series SR-B/F, solid ball, ´with soft-sealing seat

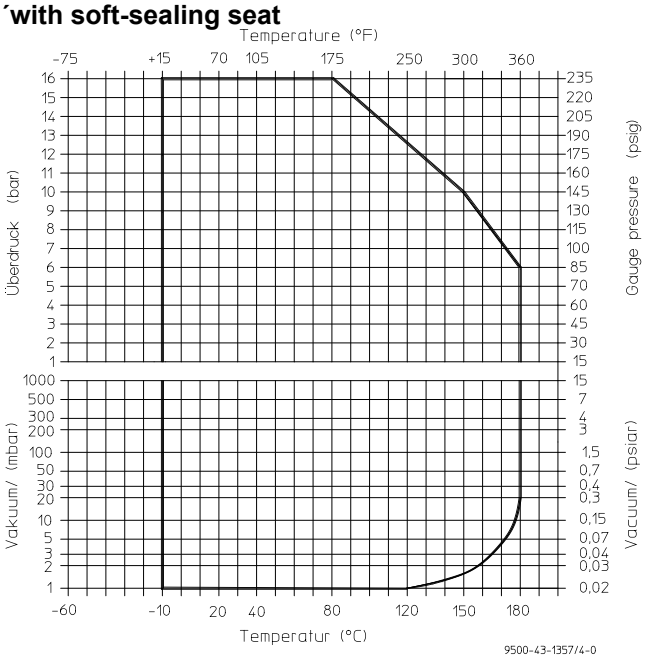

Series SRV/F, hollow ball and SRZ-V/F hollow plug, ´with soft-sealing seat

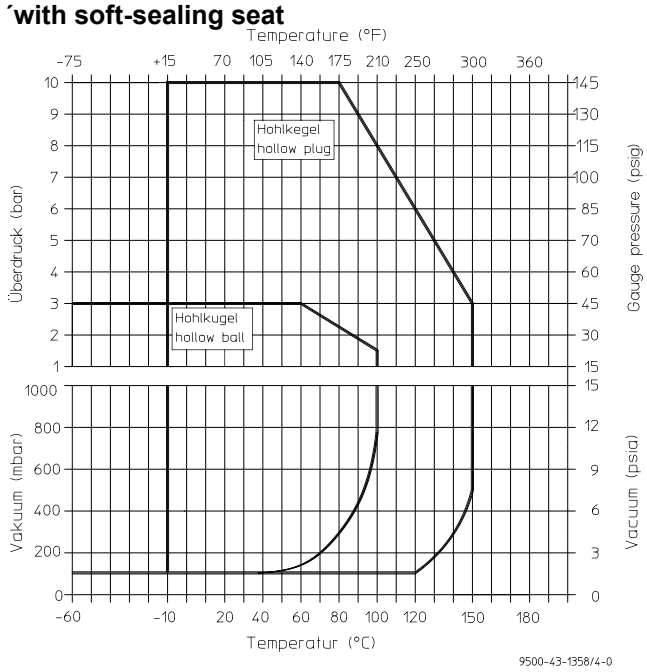

Series SRV-B/F, hollow ball, ´with soft-sealing seat

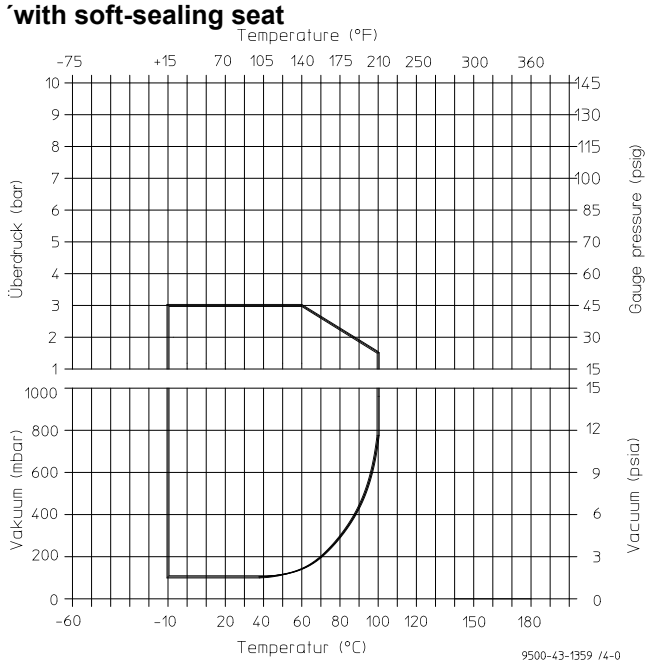

2 Notes on safety

This operating manual contains fundamental information which is to be observed during installation, operation and maintenance.
It must be read before installation and commissioning!

Installation and operation are to be performed by qualified staff.

For valves which are used in potentially explosive areas, see **Section 3**.

The area of responsibility, authority and supervision of the staff must be regulated by the customer.

General hazard symbol!
People may be put at risk.

Safety symbol! The ball valve and its function may be put at risk if this safety symbol is not observed.

It is imperative to observe warnings and signs attached directly to the valve and they are to be kept fully legible.

Non-observance of the notes on safety may result in the loss of any and all claims for damages.

For example, non-observance may involve the following hazards as:

- Failure of important functions of the valve/plant.
- Risk to people from electric, mechanical and chemical effects.
- Risk to the environment through leaks of hazardous substances.

2.1 Intended use

Richter check valves are pressure relief components in accordance with the Pressure Equipment Directive (PED) for the passage of fluids in the direction of the flow arrow on the body and for the shut-off of fluids in the opposite direction.

However, shut-off of the passage of fluids in the opposite direction may be cancelled out, depending on the installation position, ball design, differential pressure and medium.

The valves are suitable for vapours, gases and liquids of group 1 in accordance with the PED and have a corrosion-resistant plastic lining.

Solids can lead to increased wear, damage to sealing surfaces or to a reduction in the service life of the valve.

In case of the valve is intended for operating data other than those intended, the customer must carefully examine whether the design of the valve, accessories and materials are suitable for the new application (consult the manufacturer). Please consult the manufacturer.

2.2 For the customer/operator

If a valve is used, the operator must ensure that

- hot or cold valve parts are protected by the customer against being touched
- the valve has been properly installed in the pipe system
- the usual flow rates are not exceeded in continuous operation.

This is not the manufacturer's responsibility.

Loads caused by earthquakes were not allowed for in the design.

Fire protection to DIN EN ISO 10497 is not possible (plastic lining and plastic components).

2.3 Improper operation

The operational safety of the valve supplied is only guaranteed if it is used properly in accordance with **Section 2.1** of this operating manual.

The operation limits specified on the identification plate and in the pressure-temperature diagram must under no circumstances be exceeded.

3 Safety notes for applications in potentially explosive areas based on the Directive 2014/34/EU (ATEX)

The valves are intended for use in a potentially explosive area and are therefore subject to the conformity assessment procedure of the directive 2014/34/EU (ATEX).
As part of this conformity assessment, an ignition hazard analysis to EN 13463-1 to satisfy the fundamental safety and health requirements was conducted with the following result:

- **The valves do not have any ignition source of their own.**
- **The valves are not covered by the scope of application of the ATEX directive and therefore do not need to be identified accordingly.**
- **The valves may be used in a potentially explosive area.**

It is imperative to observe the individual points of intended use for application in a potentially explosive area.

3.1 Intended use

Improper operation, even for brief periods, may result in serious damage to the valve.

In connection with explosion protection, potential sources of ignition (overheating, electrostatic and induced charges, mechanical and electric sparks) may result from these improper operation; their occurrence can only be prevented by adhering to the intended use.

Furthermore, reference is made in this connection to the Directive 95/C332/06 (ATEX 118a) which contains the minimum regulations for improving the occupational health and safety of the workers who may be at risk from an explosive atmosphere.

A difference is made between two cases for the use of chargeable liquids (conductivity < 10^{-8} S/m):

1. Chargeable liquid and non-conductive lining

Charges can occur on the lining surface. As a result, this can produce discharges inside the valve. However, these discharges cannot cause ignitions if the valve is completely filled with medium.

If the valve is not completely filled with medium, e.g. during evacuation and filling, the formation of an explosive atmosphere must be prevented, e.g. by superimposing a layer of nitrogen.
It is recommended to wait 1 hour before removing the valve from the plant in order to permit the elimination of static peak charges.

This means that, to safely prevent ignitions, the valve must be completely filled with medium at all times or else a potentially explosive atmosphere must be excluded by superimposing a layer of inert gas.

2. Chargeable liquid and conductive lining

No hazardous charges can occur as charges are discharged direct via the lining and shell (surface resistance <10^9 Ohm, leakage resistance <10^6 Ohm).

Static discharges of non-conductive linings are only produced through the interaction with a non-conductive medium and are therefore the responsibility of the plant operator.

Static discharges are not sources of ignition which stem from the valves themselves!

- The temperature of the medium must not exceed the temperature of the corresponding temperature class or the maximum admissible medium temperature as per the operating manual.
- If the valve is heated (e.g. heating jacket), it must be ensured that the temperature classes prescribed in the Annex are observed.
- To achieve safe and reliable operation, it must be ensured in inspections at regular intervals that the valve is properly serviced and kept in technically perfect order.
- Increased wear to the valve can be expected with the conveyance of liquids containing abrasive constituents. The inspection intervals should be reduced compared with the usual times.
- Actuators and electric peripherals, such as temperature, pressure and flow sensors etc., must comply with the valid safety requirements and explosion protection provisions.
- The valve must be grounded.
  This can be achieved in the simplest way via the pipe screws using tooth lock washers.
  Otherwise, grounding must be ensured by other means, e.g. cable bridges.
- Plastic-lined valves must not be operated with carbon disulphide.

4 Safety note for valves, certified to Clean Air Act (TA Luft)

Certificate / Manufacturer Declaration Validity is dependent on the operating instructions being read and observed.

➢ Perform maintenance at regular intervals and check the screw connections relevant to leak-tightness and, if necessary, retighten them.

5 Transport, storage and disposal

It is imperative, for all transport work, to observe generally accepted engineering practice and the accident prevention regulations.

The valve is supplied with flange caps. Do not remove them until just before installation. They protect the plastic surfaces against dirt and mechanical damage.

Handle the goods being transported with care. During transport the valve must be protected against impacts and collisions.

Directly after receipt of the goods, the consignment must be checked for completeness and any in-transit damage.

Do not damage the external epoxy coating.

5.1 Storage

If the valve is not installed immediately after delivery, it must be put into proper storage.

The product should be stored in a dry and vibration-free, well ventilated room at as constant a temperature as possible.

Elastomers are to be protected against UV light.
In general, a storage period of 10 years should not be exceeded.

5.2 Return consignments

Valves which have conveyed aggressive or toxic media must be well rinsed and cleaned before being returned to the manufacturer's works.

It is **imperative** to enclose a **safety information sheet / general safety certificate** on the field of application with the return consignment.

Pre-printed forms are enclosed with the installation and operating manual.

Safety precautions and decontamination measures are to be mentioned.

5.3 Disposal

Parts of the valve may be contaminated with medium which is detrimental to health and the environment and therefore cleaning is not sufficient.

Risk of personal injury and damage to the environment due to the medium!

- Wear protective clothing when work is performed on the valve.
- Prior to the disposal of the valve:
  - Collect any medium, etc. which has escaped and dispose of it in accordance with the local regulations.
  - Neutralise any medium residues in the valve.
- Separate valve materials (plastics, metals etc.) and dispose of them in accordance with the local regulations.

6 Installation

- Examine valve for in-transit damage, damaged check valves must not be installed.
- Before installation the valve and the connecting pipe must be carefully cleaned to remove any dirt, especially hard foreign matter.
- During installation, pay attention to the correct tightening torque, aligned pipes and tension-free assembly.

6.1 Flange caps and gaskets

Leave protective caps on the flanges until just prior to installation.

Where there is a particularly high risk of damage to the plastic sealing surfaces, e.g. if the mating flanges are made of metal or enamel, PTFE-lined gaskets with a metal inlay should be used. These gaskets are available as accessories in the Richter range.

6.2 Direction of flow and installation position

The best installation position is **vertical**. The closing process is initiated by the gravity of the ball as the flow decreases.
A **horizontal** or **inclined** installation position is also possible. For this purpose a minimum differential pressure of 1 bar (with a hollow ball 0.5 bar) is necessary so that the ball is pushed into the seat.

With low opening differential pressures the designs SRV/F, SRV-B/F with hollow ball and SRZ-V/F with a hollow plug may also be used for this. If the installation position is reversed, SRV/F, SRV-B/F and SRZ-V/F also function as vacuum check valves and venting valves.

6.3 Grounding

The valve must be grounded.
The simplest solution is to use tooth lock washers which are placed under one pipe bolt of each flange.

At the customer's request a setscrew M6 with a hex. nut and washer will be provided at each flange as an additional grounding connection.

Otherwise, grounding must be ensured by other means, e.g. cable bridges.

6.4 Test pressure

The test pressure PT of a valve must not exceed the value of 1.5 x PS(PN) as per the identification of the valve.
Not permitted with series SRV/F, SRV-B/F, remove the hollow ball for the pressure test.

7 Operation

7.1 Initial commissioning

Normally, the valves have been tested for leaks with air or water. Prior to initial operation check cover screws. For tightening torques, see **Section 1.2**.

Unless otherwise agreed there could be residual amounts of water in the flow section of the valve; this could result in a possible reaction with the medium.

To prevent leaks, all connection screws should be retightened after the initial loading of the valve with operating pressure and operating temperature. See **Section 1.2**.

7.2 Improper operation and their consequences

- Crystallisation must be prevented, e.g. by heating. In the extreme case a blockage may occur.
- Operation with solids leads to increased wear.
- Non-observance of the pressure-temperature diagram can lead to damage.

7.3 Shutdown

The local regulations are to be observed when dismantling the valve.

Prior to undoing the flange connection ensure, that the plant is depressurised and emptied.

Prior to starting any repair work, the valve is to be thoroughly cleaned. Even if the valve has been properly emptied and rinsed, residual medium may still be found in the valve.

After dismantling, immediately protect the valve flanges against mechanical damage with flange caps. See also **Section 6.1**.

8 Malfunctions

- Flange connection ball valve/pipe is leaking

  Retighten the flange screws to a tightening torque according to **Section 1.2**. If this does not remedy the leak, the recommended torques may be exceeded by 10%.

  If this also fails to stop the leak, dismantle and inspect the valve.

- Flange connection body/cover is leaking

  Retighten the cover screws to a tightening torque according to **Section 1.2**. If this does not remedy the leak, the recommended torques may be exceeded by 10%.

  If this also fails to stop the leak, dismantle and inspect the valve.

- Valve does not close

  Are there solids between the sealing surface and the ball/plug?

  Is the sealing surface damaged?

  Is the ball or plug damaged?

9 Maintenance

- During dismantling and assembly, the information and drawings in **Sections 1 and 10** must be observed.
- All repair work is to be performed by qualified personnel using the appropriate tools. Generally recognised practice in mechanical engineering is to be observed.
- For the arrangement, designation and item numbers of all parts of the valve, see Section 10.
- Spare parts are to be ordered with all the details in acc. with the valve identification.
- Only original spare parts may be installed.
- To prevent leaks, a regular check of the connection screws should be made in line with the operating requirements.
  For tightening torques, see **Section 1.2**.

9.1 Dismantling

9.1.1 Replacing worn part

- Screw body **100** and cover **106** apart.
- Replace ball **200** or plug **204**.
- Assembly is performed in reverse sequence.

9.2 Assembly

- Prior to assembly all parts must be cleaned and the plastic-lined parts checked for damage.
- Bolt body **100** and cover **106** together. Tighten the screw fitting to a tightening torque in accordance with **Section 1.2** in diametrically opposite sequence.

10 Drawings

10.1 Sectional drawing SR/F, SR-B/F, SRV/F und SRV-B/F

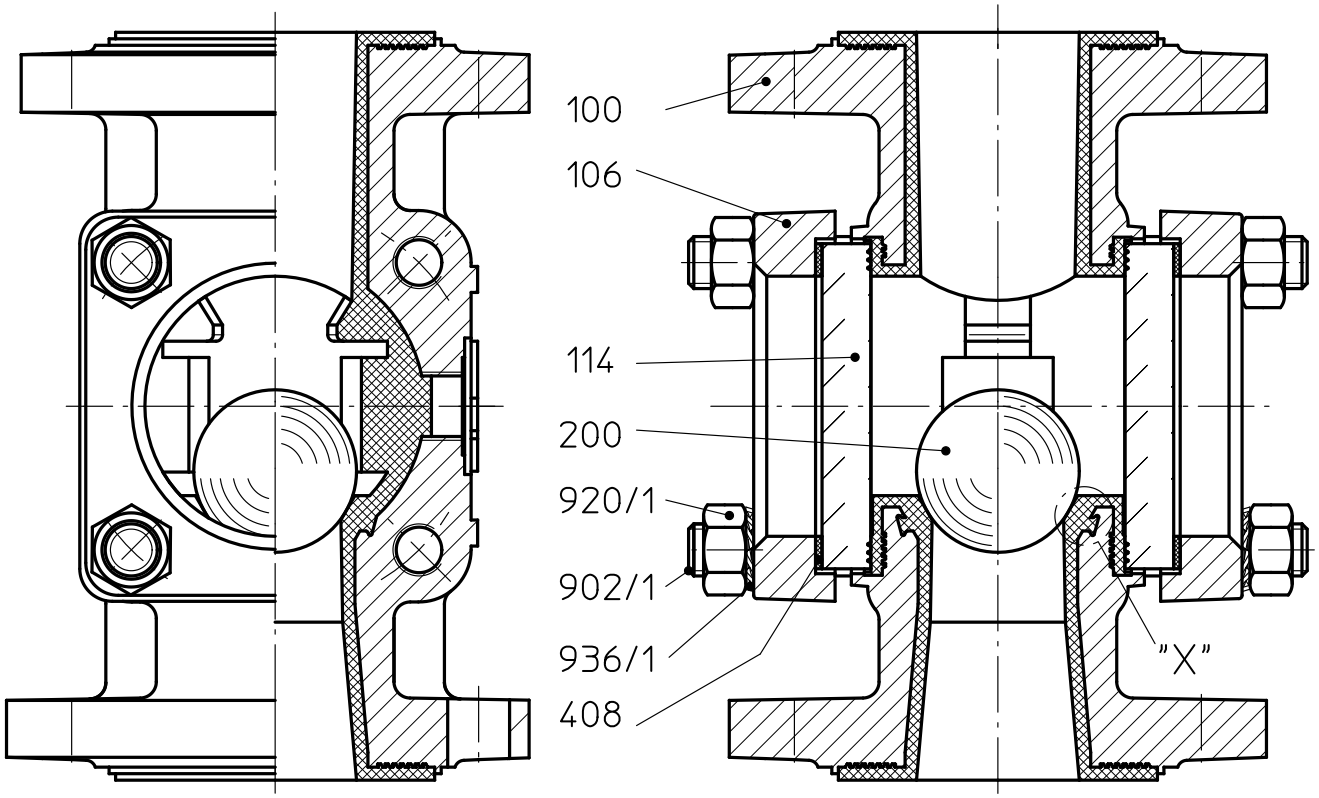

*** SR/F, SR-B/F solid ball**
SRV/F, SRV-B/F hollow ball

100	body
106	cover
114	pane
200 *	ball
408	seal
415	seat seal
902/1	stud screw
920/1	hex. nut
936/1	toothed lock washer

„X“
SR-B/F, SRV-B/F
´with soft-sealing seat

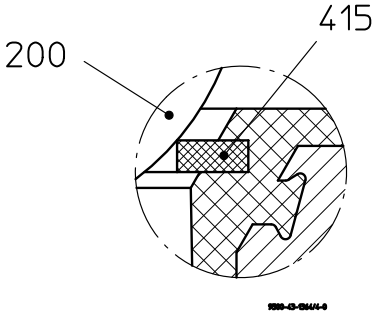

10.2 Sectional drawing SRZ-V/F

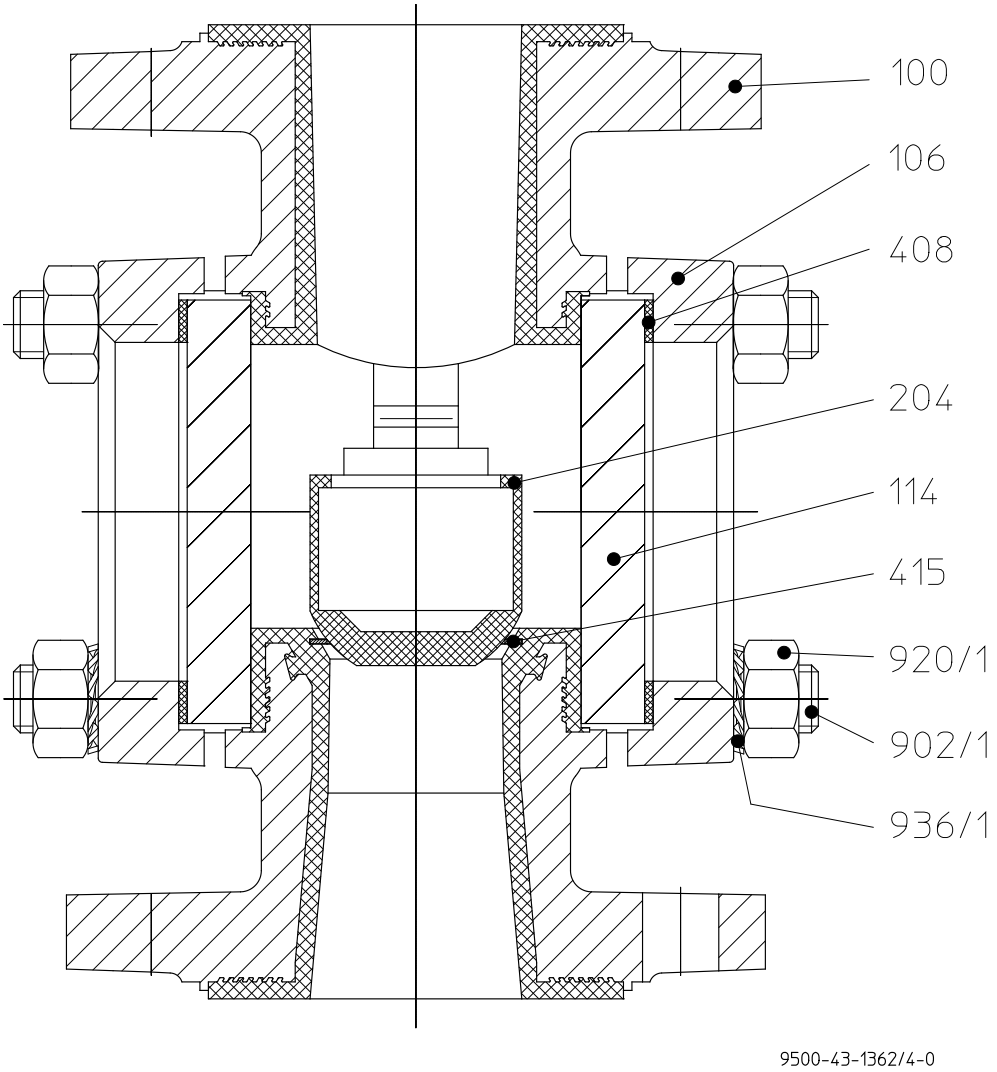

100	body	**415**	seat seal
106	cover	**902/1**	stud screw
114	pane	**920/1**	hex. nut
204	plug	**936/1**	toothed lock washer
408	seal		

10.3 Dimensional drawing

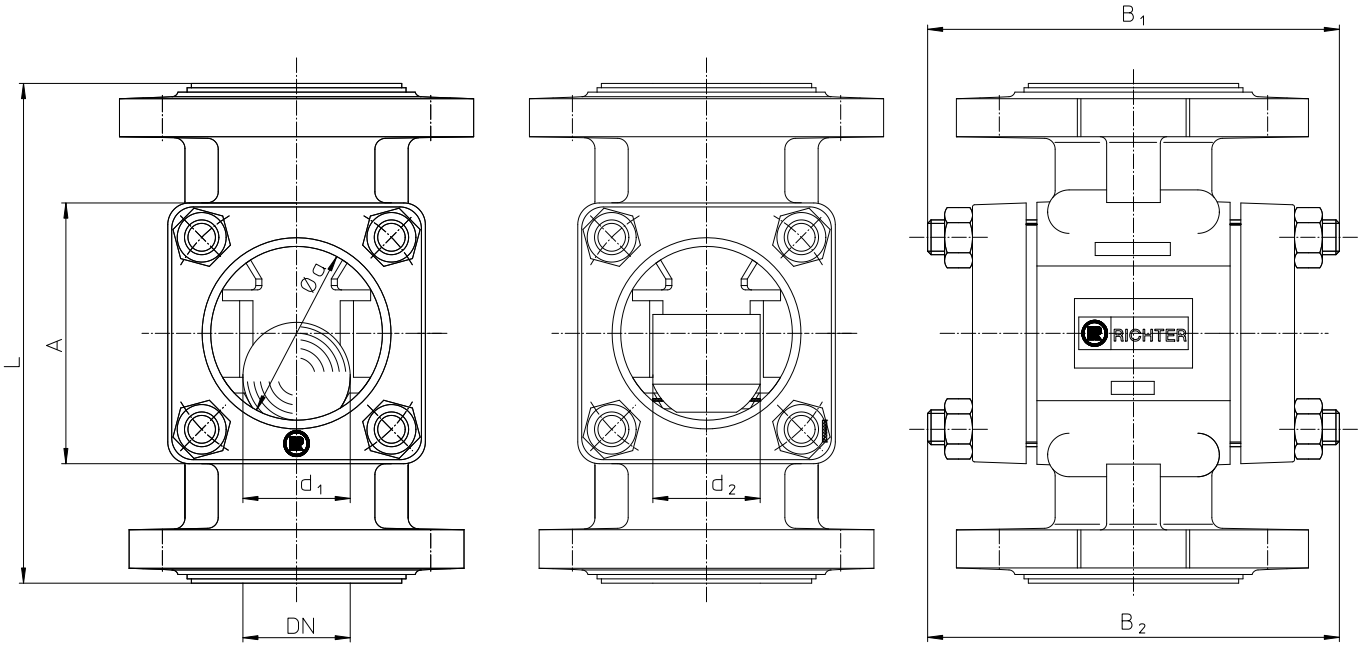

DN		25	40	50	80	100
L		160	200	230	310	350
A		□ 85	□ 110	□ 120	Ø 190	Ø 210
B_1		ca. 135	ca. 155	ca. 185	ca. 246	ca. 294
B_2		ca. 158	ca. 182	ca. 185	ca. 289	ca. 347
Ø a		48	65	80	100	125
Ball Ø	SR/F, SRV/F, SR-B/F, SRV-B/F	25	40	50	80	90
Plug Ø	SRZ-V/F	26	41	50	--	--

All dimensions in mm

Flange connecting dimensions:
Flanges acc. to DIN EN 1092-2, type B (ISO 7005-2, type B) PN 16
or flanges drilled to ASME B16.5 Class 150

Richter Chemie-Technik GmbH
Otto-Schott-Straße 2
D-47906 Kempen
www.richter-ct.com

RICHTER
Process Pumps & Valves
A Unit of IDEX Corporation

CE Konformitätserklärung nach EN ISO//IEC 17050
Declaration of Conformity according to EN ISO//IEC 17050

Produkt *Product*	Kunststoffausgekleidete Rückschlagventile *Plastic lined check valves*
Bauart *Design*	Kugelrückschlagventil, Kegelrückschlagventil, Rückschlagventil mit integriertem Schauglas *Ball check valve, plug check valve, check valve with integrated sight glass*
Baureihe *Series*	BC, BCV, CV, CVV, GR, RV, SR, SR-B, SRV, SRV-B, SRZ-V
Nennweite *Size*	DN 15 bis DN 200, ½" bis 6" *DN 15 to DN 200, ½" to 6"*
Seriennummer *Series number*	ab/*from* 19.07.2016
EU-Richtlinie *EU-Directive*	2014/68/EU Druckgeräterichtlinie 2014/68/EU *Pressure Equipment Directive*
Angewandte Technische Spezifikation *Applied Technical Specification*	DIN EN ISO 12100 AD 2000
Überwachungsverfahren *Surveillance Procedure*	2014/68/EU Zertifizierungsstelle für Druckgeräte der TÜV Nord Systems GmbH & Co. KG Große Bahnstraße 31 D-22525 Hamburg Notified Body 0045
Konformitätsbewertungs-verfahren 2014/68/EU *Conformity assessment procedure 2014/68/EU*	Modul H Zertifikats Nr. 07/202/1411/Z/0091/16/D
Kennzeichnung *Marking*	2014/68/EU [1] ≥ DN 32, ≥ 1" CE 0045 2014/68/EU [1] ≥ *DN 32, ≥ 1"*

Das Unternehmen Richter Chemie-Technik GmbH bescheinigt hiermit, dass die o.a. Baureihen die grundsätzlichen Anforderungen der aufgeführten Richtlinien und Normen erfüllen.
Richter Chemie-Technik GmbH confirms that the basic requirements of the above specified directives and standards have been fulfilled.

[1] Für nicht aufgeführte Nennweiten ist eine Kennzeichnung nicht zulässig.
For sizes not listed a marking is not permissible.

Kempen, 04.07.2017

G. Kleining
Leiter Forschung & Entwicklung
Manager Research & Development

M. Pohlmann
Leiter Qualitätsmanagement
Quality Manager

Richter Chemie-Technik GmbH
Qualitätsmanagement
Otto-Schott-Str. 2
D-47906 Kempen
Germany
Tel.: +49 / (0) 21 52 / 146-0
Fax: +49 / (0) 21 52 / 146-190
richter-info@idexcorp.com

RICHTER
Process Pumps & Valves
IDEX FLUID & METERING

Herstellererklärung ATEX Richtlinie 2014/34/EU

Manufacturer's Declaration ATEX Directive 2014/34/EU

Alle Richter Armaturen inkl. Absperr-, Regel- und Sicherheitsventile
All Richter Valves incl. Shut-off, Control and Safety Valves

Die oben bezeichneten Armaturen wurden einer Risikoanalyse nach der Richtlinie 2014/34/EU mit folgendem Ergebnis unterzogen:
The valves specified above underwent a risk analysis according to Directive 2014/34/EU with the following result:

- **Richter Armaturen besitzen keine eigenen potentiellen Zündquellen. Die Armaturen können sowohl manuell als auch mechanisch/elektrisch angetrieben werden.**
  Die Armaturen fallen nicht in den Anwendungsbereich der ATEX-Richtlinie 2014/34/EU und dürfen deshalb auch nicht danach gekennzeichnet werden.
  Richter valves do not have their own potential sources of ignition. The valves can be actuated manually as well as mechanically/electrically.
  ATEX Directive 2014/34/EU is not applicable to these valves. Therefore, it is not allowed to mark the valves according to that Directive.

- **Die Armaturen dürfen in explosionsgefährdeten Bereichen eingesetzt werden.**
  The valves can be used in potentially explosive atmospheres.

- **Dennoch müssen für den Armatureneinsatz in explosionsgefährdeten Bereichen Sicherheitshinweise bzgl. des Explosionsschutzes beachtet werden. Richter hat hierzu die Betriebsanleitungen um den Zusatz „Sicherheitshinweise für den Einsatz in explosionsgefährdeten Bereichen in Anlehnung an die Richtlinie 2014/34/EU" erweitert.**
  However, when using the valves in potentially explosive atmospheres, specific safety notes on explosion protection must be observed. Here, Richter has extended their operating manuals to include the supplement „Safety notes for applications in potentially explosive atmospheres based on Directive 2014/34/EU ".

Ergänzender Hinweis: *Supplementary note:*

- **Elektrische/mechanische Antriebe müssen einer eigenen Konformitätsbewertung nach ATEX unterzogen werden.**
  Electrical/mechanical actuators must undergo a separate conformity assessment.

Kempen, 20.04.2016

Richter Chemie-Technik GmbH

M. Pohlmann

Leiter Qualitätsmanagement
Quality Manager

RICHTER
Process Pumps & Valves
A Unit of IDEX Corporation

Herstellererklärung / *Manufacturer´s Declaration*

TA-Luft / *German Clean Air Act (TA-Luft)*

Richter Rückschlagventil / *Richter Check Valve*

Hiermit erklären wir, dass die Rückschlagventile der Baureihen
Hereby we declare, that the Check Valves of the series

CV, BC, SR, GR, RV, PRS

die Anforderung bezüglich der Gleichwertigkeit gemäß Ziffer 5.2.6.4 der Technischen Anleitung-Luft (TA-Luft vom 01.10.2002 / VDI 2440 Ziffer 3.3.1.3) erfüllen.

Grundlage sind die "Prüfgrundsätze für den Eignungsnachweis von Spindelabdichtungen in Armaturen als gleichwertig nach TA-Luft" des TÜV Süddeutschland Bau und Betrieb GmbH vom 22.09.1992.

Die Herstellererklärung beinhaltet den Eignungsnachweis einer inneren Flanschverbindung gemäß VDI 2440 hinsichtlich Dichtheit bzw. der Einhaltung der spezifischen Leckagerate nach TA-Luft $\lambda \leq 10^{-4} \frac{mbar \cdot l}{s \cdot m}$ und einer erweiterten Prüfung unter Betriebsbedingungen.

Voraussetzung für die Gültigkeit der Herstellererklärung ist das Beachten und Einhalten der Betriebsanleitung.

meets the requirement relating to the equivalence according to Section 5.2.6.4 of the German Clean Air Act (Clean Air Act dated 01.10.2002 / VDI 2440 Section 3.3.1.3).

The basics are the "Testing principles for the suitability verification of stem seals in valves as being equivalent in accordance to the German Clean Air Act of the TÜV Süddeutschland Bau und Betrieb GmbH dated 22 September 1992.

The manufacture´s declaration contains the suitability verification of an internal flange connection in accordance to VDI 2440 with regard to tightness and the observance of the specific leakage rate according to the German Clean Air Act $\lambda \leq 10^{-4} \frac{mbar \cdot l}{s \cdot m}$ *and an extended test under the above-mentioned operating conditions.*

Manufacturer´s declaration validity is dependent on the operating instructions being read and observed.

Kempen, 18.10.2017

Gregor Kleining
Leiter Forschung & Entwicklung
Manager Research & Development

i.V.

Michael Pohlmann
Leiter Qualitätsmanagement
Quality Manager

Richter Chemie-Technik GmbH · Postfach 10 06 09 · D-47883 Kempen

08.01.2015

Declaration of no objection

Dear Sirs,

The compliance with laws for the industrial safety obligates all commercial enterprises to protect their employees and/or humans and environment against harmful effects while handling dangerous materials.
The laws are such as: the Health and Safety at Work Act (ArbStättV), the Ordinance on Harzadous Substances (GefStoffV, BIOSTOFFV), the procedures for the prevention of accidents as well as regulations to environmental protection, e.g. the Waste Management Law (AbfG) and the Water Resources Act (WHG)

An inspection/repair of Richter products and parts will only take place, if the attached explanation is filled out correctly and completely by authorized and qualified technical personnel and is available.

In principle, radioactively loaded devices sent in, are not accepted.

Despite careful draining and cleaning of the devices, safety precautions should be necessary however, the essential information must be given.

The enclosed declaration of no objection is part of the inspection/repair order. Even if this certificate is available, we reserve the right to reject the acceptance of this order for other reasons.

Best regards
RICHTER CHEMIE-TECHNIK GMBH

Richter Chemie-Technik GmbH
Otto-Schott-Straße 2
D-47906 Kempen
USt. Id. Nr. DE 811 127 054

Telefon + 49 (0) 21 52 / 146- 0
Telefax + 49 (0) 21 52 / 146- 190
richter-info@idexcorp.com
www.richter-ct.com

J.P. Morgan AG, Frankfurt/Main · Kto. Nr. 6 161 507 538 (BLZ 501 108 00)
BIC/SWIFT: CHASDEFX · IBAN Code: DE61 5011 0800 6161 5075 38
Sitz der Gesellschaft: Kempen · Amtsgericht Krefeld HRB 9635
Geschäftsführer: Barbara Wladarz, Bret A. Prybylski

Safety Information / Declaration of No Objection Concerning the Contamination of Richter-Pumps, -Valves and Components

1 SCOPE AND PURPOSE

Each entrepreneur (operator) carries the responsibility for the health and safety of his employees. This extends also to the personnel, who implements repairs with the operator or with the contractor.

Enclosed declaration is for the information of the contractor concerning the possible contamination of the pumps, valves and component sent in for repair. On the basis of this information for the contractor is it possible to meet the necessary preventive action during the execution of the repair.

Note: The same regulations apply to repairs **on-site**.

2 PREPARATION OF DISPATCH

Before the dispatch of the aggregates the operator must fill in the following declaration completely and attach it to the shipping documents. The shipping instructions indicated in the respective manual are to be considered, for example:

- Discharge of operational liquids
- remove filter inserts
- lock all openings hermetically
- proper packing
- Dispatch in suitable transport container
- Declaration of the contamination fixed **outside!!** on the packing

Declaration about the Contamination of Richter Pumps, -Valves and Components

RICHTER Process Pumps & Valves

The repair and/or maintenance of pumps, valves and components can only be implemented if a completely filled out declaration is available. If this is not the case, delay of the work will occur. If this declaration is not attached to the devices, which have to be repaired, the transmission can be rejected.

Every aggregate has to have it's own declaration.

This declaration may be filled out and signed only by authorized technical personnel of the operator.

Contractor/dep./institute :	Reason for transmitting ☒ Please mark the applicable
	Repair: ☐ subject to fee ☐ Warranty
Street :	**Austausch:** ☐ subject to fee ☐ Warranty
Postcode, city :	☐ Exchange/ Replacement already initiated/received
Contact person :	**Return**: ☐ Leasing ☐ Loan ☐ for credit note
Phone : Fax :	
End user :	

A. Details of Richter-product:

Classification:

Article number:

Serial number:

Failure description:

B. Condition of the Richter-product:

	no[1)]	yes	no
Was it in operation ?	☐	☐	
Drained (product/operating supply item) ?		☐	☐
All openings hermetically locked!		☐	
Cleaned ?		☐	☐
If yes, with which cleaning agent:			
and with which cleaning method:			

Contamination :	no[1)]	yes
toxic	☐	☐
caustic	☐	☐
inflammable	☐	☐
explosive[2)]	☐	☐
mikrobiological[2)]	☐	☐
radioactive[3)]		
other pollutant	☐	☐

[1)] if "no", then forward to **D**.

[2)] Aggregates, which are contaminated with microbiological or explosive substances, are only accepted with documented evidence of an approved cleaning.

[3)] Aggregates, which are contaminated with radioactive substances, are not accepted in principle.

C. Details of the discharged materials (must be filled out imperatively)

1. **With which materials did the aggregate come into contact ?** Trade name and/or chemical designation of operational funds and discharged materials, material properties, e.g. as per safety data sheet (e.g. toxic, inflammable, caustic)

X Trade name:	Chemical designation:
a)	
b)	
c)	
d)	

	no	yes
2. **Are the materials specified above harmful to health ?**	☐	☐
3. **Dangerous decomposition products during thermal load ?**	☐	☐
If yes, which ones?		

D. Mandatory declaration:

We assure that the data in this explanation are truthful and complete and as a signatory I am able to form an opinion about this. We are aware that we are responsible towards the contractor for damages, which results from incomplete and incorrect data. We commit ourselves to exempt the contractor from claims for damages of thirds resulting from incomplete or incorrect data. We are aware that we are directly responsible towards thirds, irrespective of this declaration, which belongs in particularly to the employees of the contractor consigned with the handling repair of the product.

Name of the authorized person (in block letters):

Date

Signature

Company stamp

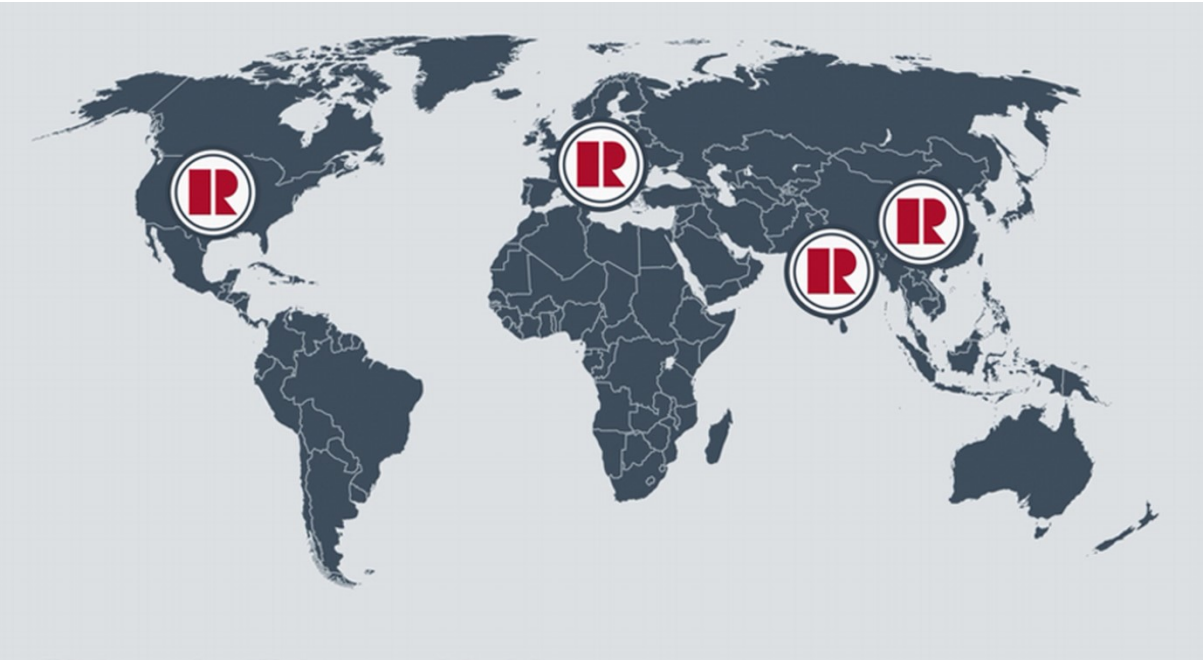

Richter Chemie-Technik GmbH
Otto-Schott-Str. 2
D-47906 Kempen / Germany
Tel: +49 (0) 2152 146-0
Fax: +49 (0) 2152 146-190
Email: Richter-Info@idexcorp.com
Internet: www.richter-ct.com

Richter Pumps & Valves, Inc.
406 State Street,
Cedar Falls 50613, IA / USA
Tel.: +1 / 319 / 268 - 8038
Fax: +1 / 319 / 273 - 8157
Email: RichterCedarFalls-Info@idexcorp.com
Internet: www.richter-inc.com

Richter (EP), Nanjing, Shanghai Office
Room 3502 - 3504, Zhaofeng Plaza
No. 1027, Changning Road, Shanghai 200050 / China
Tel: +86 / 21 / 6150 - 9812
Fax: +86 / 21 / 5241 - 2870
Email: RichterShanghai-Info@idexcorp.com
Internet: www.richter-ct.com

Richter Pumps & Valves Pvt. Ltd.
Suntech Centre, 37-40, Subhash Road
Vile Parle East, Mumbai 400057 / India
Tel: +91 / 22 / 287 94 610
Fax: + 91 / 22 / 287 94 680
Email: RichterMumbai-Info@idexcorp.com
Internet: www.richter-ct.com

© Richter Chemie-Technik GmbH 2019
Subject to change without notice.

Edition 03/2020
Revision 0,0
9550B010-en

Richter™ = Richter Chemie-Technik GmbH; IDEX™ = IDEX Corporation